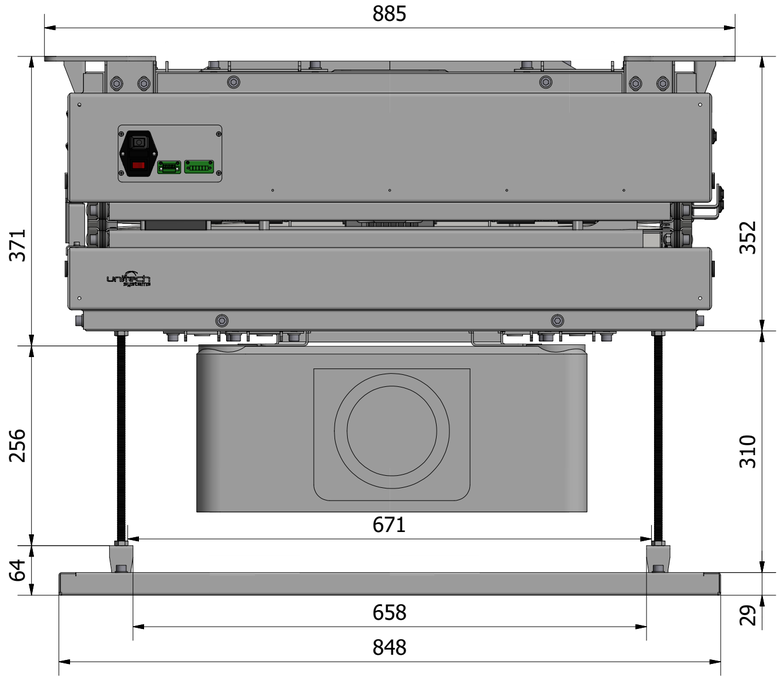

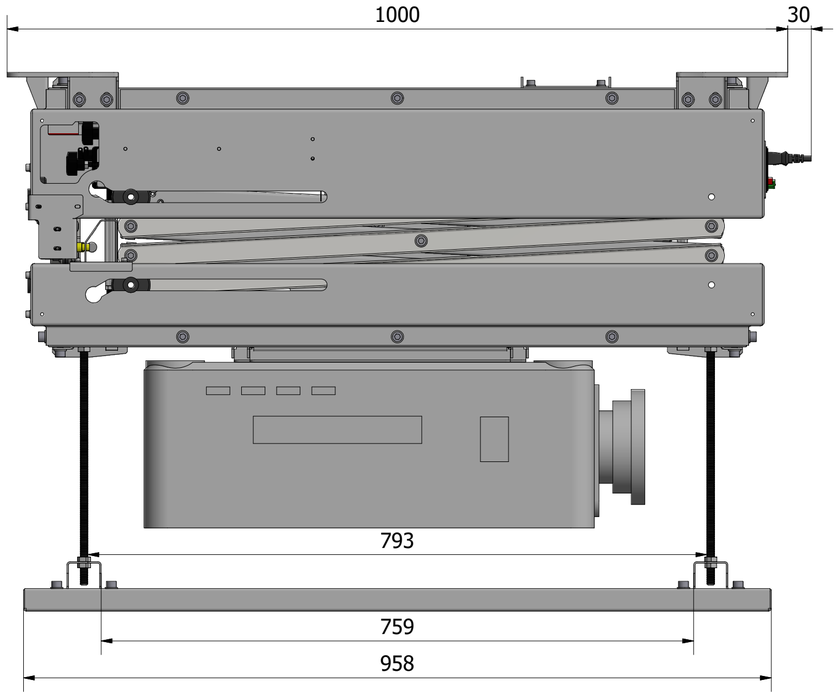

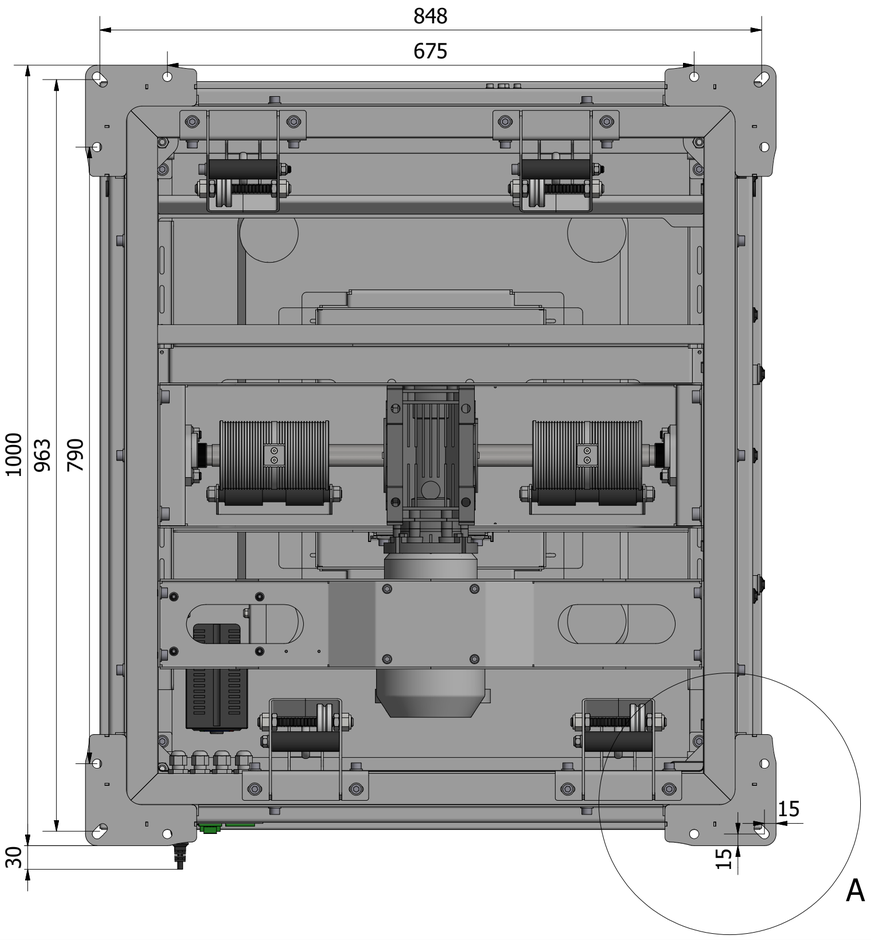

A (1/2)

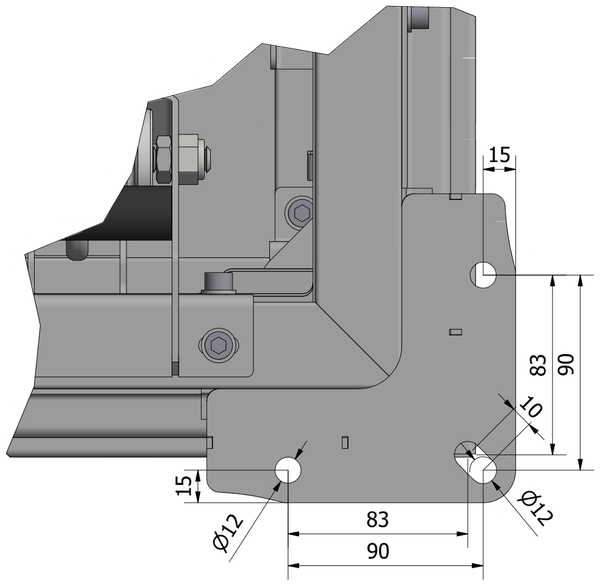

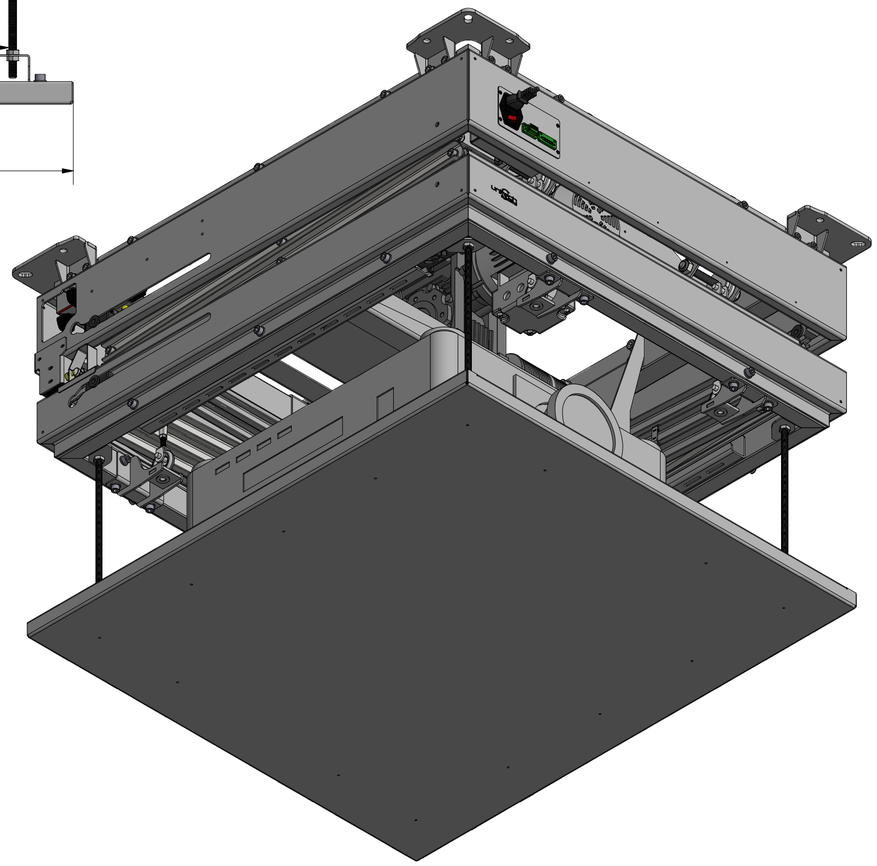

CATEGORY	PROJECTOR CEILING LIFT	DRAWING TYPE	
MODEL	PLCS-V2-1500	DRAFT	FINAL
FEATURE	LOAD CAPACITY UP TO 100kg(PROJECTOR+ CEILING COVER), VERTICAL MOTION 1500MM		X
COLOUR	POWDER COATING RAL9005 (BLACK BUFF)	REVERSION	DATE
DRAWING No	V1.1.15032022-SK	NO	

unitech systems

ALL RIGHTS STRICTLY RESERVED. REPRODUCTION OR ISSUE TO THIRD PARTIES IN ANY FORM WHATEVER, IS NOT PERMITTED WITHOUT WRITTEN AUTHORITY FROM UNITECH SYSTEMS.